

MINI WW-T

Item code	**86.D109.1251.01**
Product type	**Indoor**
Category	**Downlights**
Family	**MINI**
Subfamily	**MINI WW-T**
Pictograms	CRI 90 · CE · Driver INCL. · On Off · DALI · IP 20

Dimensions	
Product dimensions (mm)	**ø88.3*H83.5mm**

Scheme

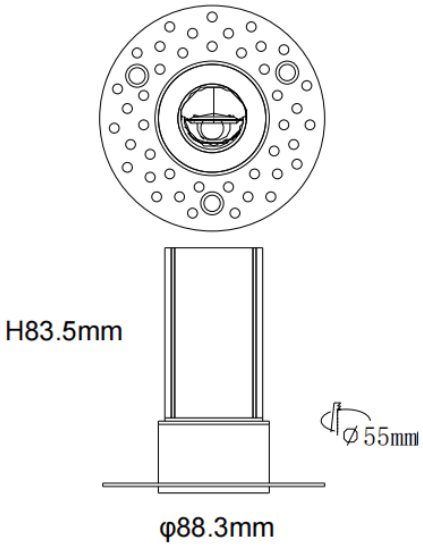

Product	
Real power (W)	**10**
Real luminous flux (Lm)	**650**
Luminous efficiency (Lm/W)	**65**
Beam angle (º)	**wall washer**
Life time (h)	**50000 h L80B10**
IP	**20**
Control gear	**ON/OFF**
Colour temperature (K)	**2700**
Colour consistency (SDCM)	**SDCM3**
CRI	**90**